Centre Number	Candidate Number	Name

UNIVERSITY OF CAMBRIDGE INTERNATIONAL EXAMINATIONS
General Certificate of Education Advanced Level

PHYSICS **9702/06**

Paper 6

May/June 2005

45 minutes

Candidates answer on the Question Paper.
No Additional Materials are required.

READ THESE INSTRUCTIONS FIRST

Write your Centre number, candidate number and name on all the work you hand in.
Write in dark blue or black pen in the spaces provided on the Question Paper.
You may use a soft pencil for any diagrams, graphs or rough working.
Do not use staples, paper clips, highlighters, glue or correction fluid.

Answer **all** of the questions in any **two** options.
The number of marks is given in brackets [ ] at the end of each question or part question.
You may lose marks if you do not show your working or if you do not use appropriate units.

If you have been given a label, look at the details. If any details are incorrect or missing, please fill in your correct details in the space given at the top of this page.

Stick your personal label here, if provided.

For Examiner's Use	
A	
F	
M	
P	
T	
Total	

This document consists of **21** printed pages and **3** blank pages.

© UCLES 2005

Data

speed of light in free space,	$c = 3.00 \times 10^{8}\ \text{m s}^{-1}$
permeability of free space,	$\mu_0 = 4\pi \times 10^{-7}\ \text{H m}^{-1}$
permittivity of free space,	$\epsilon_0 = 8.85 \times 10^{-12}\ \text{F m}^{-1}$
elementary charge,	$e = 1.60 \times 10^{-19}\ \text{C}$
the Planck constant,	$h = 6.63 \times 10^{-34}\ \text{J s}$
unified atomic mass constant,	$u = 1.66 \times 10^{-27}\ \text{kg}$
rest mass of electron,	$m_e = 9.11 \times 10^{-31}\ \text{kg}$
rest mass of proton,	$m_p = 1.67 \times 10^{-27}\ \text{kg}$
molar gas constant,	$R = 8.31\ \text{J K}^{-1}\ \text{mol}^{-1}$
the Avogadro constant,	$N_A = 6.02 \times 10^{23}\ \text{mol}^{-1}$
the Boltzmann constant,	$k = 1.38 \times 10^{-23}\ \text{J K}^{-1}$
gravitational constant,	$G = 6.67 \times 10^{-11}\ \text{N m}^2\ \text{kg}^{-2}$
acceleration of free fall,	$g = 9.81\ \text{m s}^{-2}$

© UCLES 2005

Formulae

uniformly accelerated motion, $s = ut + \frac{1}{2}at^2$
$v^2 = u^2 + 2as$

work done on/by a gas, $W = p\Delta V$

gravitational potential, $\phi = -\frac{Gm}{r}$

simple harmonic motion, $a = -\omega^2 x$

velocity of particle in s.h.m., $v = v_0 \cos \omega t$
$v = \pm \omega \sqrt{(x_0^2 - x^2)}$

resistors in series, $R = R_1 + R_2 + \ldots$

resistors in parallel, $1/R = 1/R_1 + 1/R_2 + \ldots$

electric potential, $V = \frac{Q}{4\pi\epsilon_0 r}$

capacitors in series, $1/C = 1/C_1 + 1/C_2 + \ldots$

capacitors in parallel, $C = C_1 + C_2 + \ldots$

energy of charged capacitor, $W = \frac{1}{2}QV$

alternating current/voltage, $x = x_0 \sin \omega t$

hydrostatic pressure, $p = \rho g h$

pressure of an ideal gas, $p = \frac{1}{3}\frac{Nm}{V}\langle c^2 \rangle$

radioactive decay, $x = x_0 \exp(-\lambda t)$

decay constant, $\lambda = \frac{0.693}{t_{\frac{1}{2}}}$

critical density of matter in the Universe, $\rho_0 = \frac{3H_0^2}{8\pi G}$

equation of continuity, $Av = \text{constant}$

Bernoulli equation (simplified), $p_1 + \frac{1}{2}\rho v_1^2 = p_2 + \frac{1}{2}\rho v_2^2$

Stokes' law, $F = Ar\eta v$

Reynolds' number, $R_e = \frac{\rho v r}{\eta}$

drag force in turbulent flow, $F = Br^2\rho v^2$

© UCLES 2005

[Turn over

Answer **all** of the questions in any **two** of the Options.

Answer the questions in the spaces provided on the Question Paper.

The Options are as follows.

Option A	Astrophysics and Cosmology	questions 1, 2 and 3
Option F	The Physics of Fluids	questions 4, 5 and 6
Option M	Medical Physics	questions 7, 8 and 9
Option P	Environmental Physics	questions 10, 11 and 12
Option T	Telecommunications	questions 13 and 14

Option A

Astrophysics and Cosmology

1 Fig.1.1 illustrates the Milky Way galaxy.

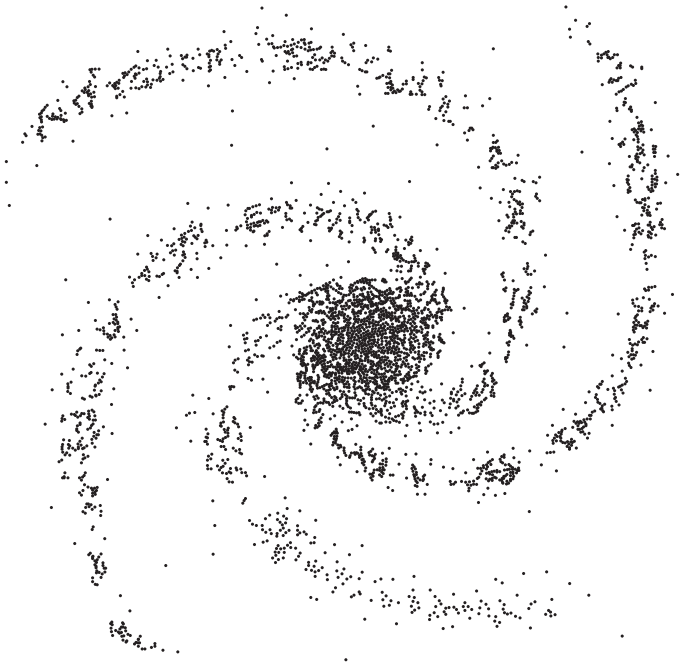

Fig. 1.1

(a) On Fig. 1.1, mark the approximate position of the Solar System. [1]

© UCLES 2005

(b) State approximate values, in light-years, for

(i) the diameter of the Milky Way galaxy,

diameter = ... light-years [1]

(ii) the average separation of stars in one arm of the galaxy.

separation = ... light-years [1]

(c) Hubble was able to map out the Universe to a distance of approximately 500 million light-years.
State the number of galaxies that were estimated to exist within this distance.

number = ... [1]

© UCLES 2005

[Turn over

2 Fig. 2.1 shows the variation with age of the temperature of the Universe.

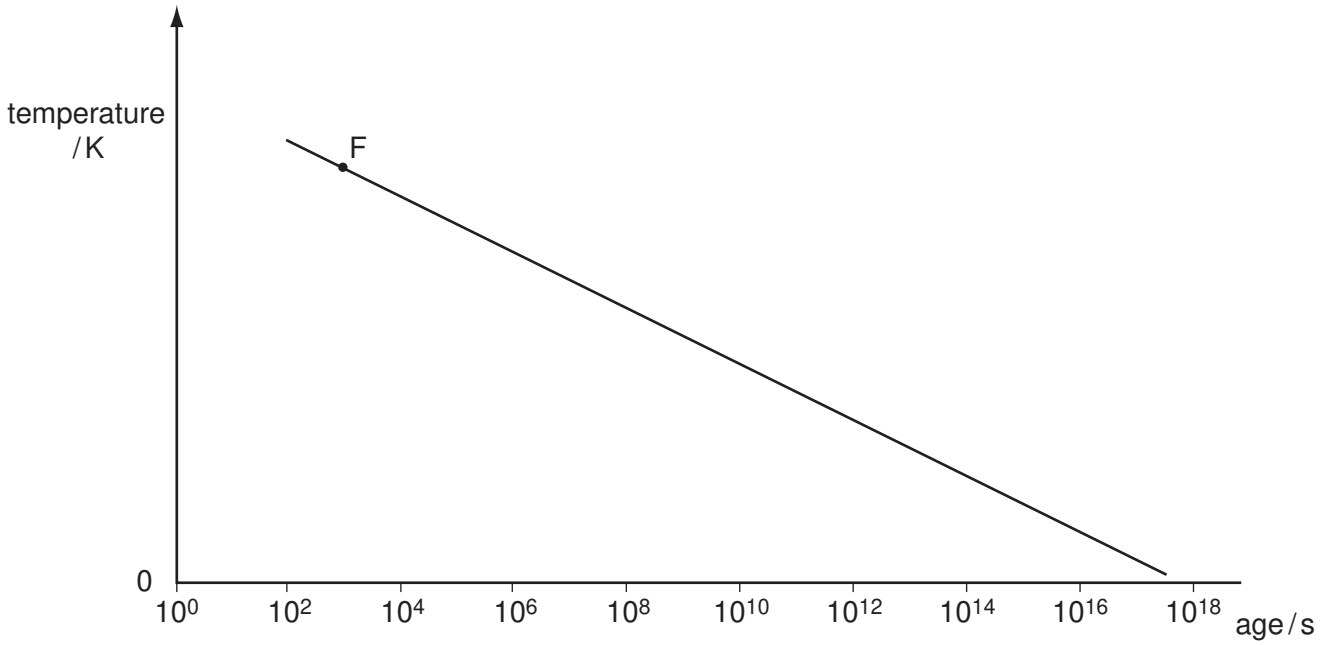

Fig. 2.1

(a) Point F on the graph represents the point at which light elements were formed. Suggest the maximum temperature at which this formation occurred.

temperature = ... K [1]

(b) Mark the point on the line at which galaxies began to form. [1]

(c) Suggest why, in the Universe, there is an excess of matter over antimatter.

.....

.....

.....

.....

.....[4]

© UCLES 2005

3 It has been reported recently that some galaxies have been discovered that are estimated to be 12600 million light-years from Earth.

(a) (i) The Hubble constant has been estimated to be 60 km s^{-1} Mpc^{-1}. Use this value to calculate the approximate age of the Universe. (1 pc = 3.1×10^{16} m)

age = ... years [5]

(ii) Hence calculate the fraction of the age of the Universe for which the light from these galaxies has been travelling to Earth.

fraction = ... [1]

(iii) Suggest why the discovery of these galaxies may have significance for an understanding of the development of the Universe.

.....

.....

.....[2]

(b) Explain why there is a limit to the extent of the observable Universe.

.....

.....

.....[2]

© UCLES 2005

Option F

The Physics of Fluids

4 A rectangular iceberg floats in seawater of density 1030 kg m^{-3}, as illustrated in Fig. 4.1.

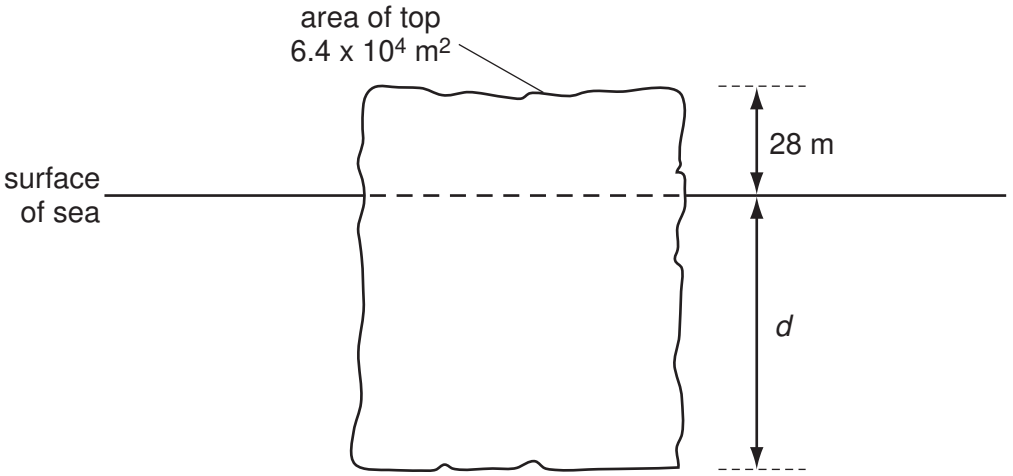

Fig. 4.1

The iceberg floats with its top, area 6.4×10^4 m^2, 28 m above the surface of the sea. The density of ice is 920 kg m^{-3}.

(a) State what provides the upthrust on an object when it is immersed in a fluid.

.....

.....[1]

(b) The bottom of the iceberg is at a depth *d*, measured in metres. Give expressions, in terms of *d*, for

(i) the mass of the iceberg,

.....

.....

.....[2]

(ii) the mass of seawater displaced by the iceberg.

.....

.....[1]

© UCLES 2005

(c) Using your answers in **(b)**, determine

(i) the depth d,

d = ... m [2]

(ii) the fraction of the iceberg that is below the water surface.

fraction = ... [1]

© UCLES 2005

5 **(a)** Explain what is meant by a *viscous* liquid.

.....

.....

.....[2]

(b) Suggest why, for viscous flow of a fluid through a pipe, the flow rate is expressed as a volume flow rate, measured in $m^3 s^{-1}$, rather than a linear speed, measured in $m s^{-1}$.

.....

.....

.....[2]

(c) The volume flow rate V of a viscous liquid undergoing steady flow through a tube of length L and radius r is given by

$$V = \frac{\pi r^4 p}{8\eta L} ,$$

where η is the viscosity of the liquid and p is the pressure difference between the ends of the tube.
Water of density $1.0 \times 10^3 kg m^{-3}$ flows out of a container through a tube of length 13 cm and internal diameter 1.8 mm, as illustrated in Fig. 5.1.

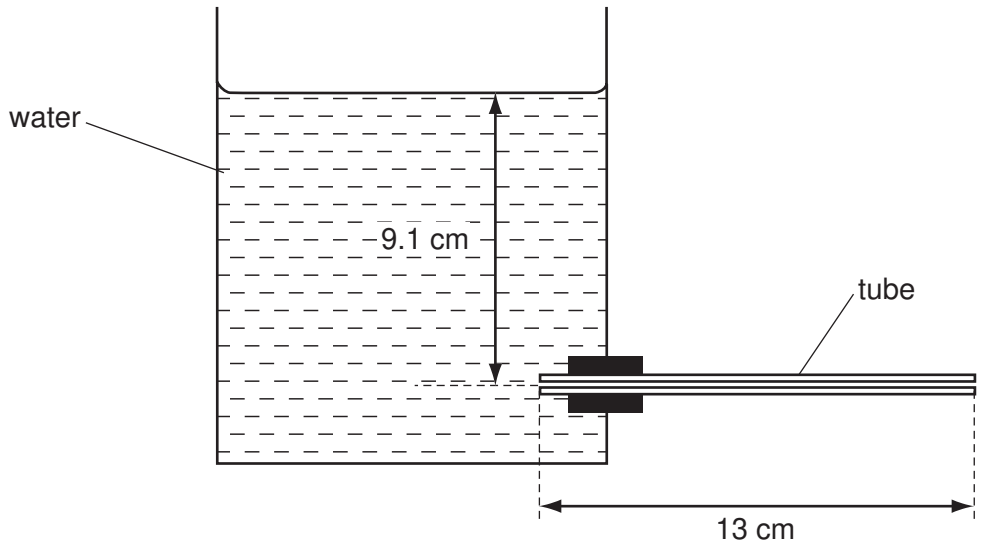

Fig. 5.1

© UCLES 2005

When the axis of the tube is at a depth of 9.1 cm below the water surface, water runs out of the tube at a rate V of $1.5 \times 10^{-6}\,m^3\,s^{-1}$.

(i) Show that the pressure difference between the ends of the tube is approximately 890 Pa.

[2]

(ii) Determine the viscosity of the water.

viscosity = ... $N\,s\,m^{-2}$ [2]

© UCLES 2005

6 Streamlines are a means by which fluid flow may be modelled.

(a) Explain

(i) what is meant by a *streamline*,

.....

.....[1]

(ii) why streamlines can never touch or cross.

.....

.....[1]

(b) State and explain the change in fluid flow when streamlines become closer together.

.....

.....

.....

.....[3]

© UCLES 2005

For Examiner's Use

Option M

Medical Physics

7 **(a)** Outline briefly the use of magnetic resonance to obtain diagnostic information about internal body structures.

.....

.....

.....

.....

.....

.....

.....

.....

.....[5]

(b) In some medical applications, the diagnostic information may be obtained using magnetic resonance or using X-rays. State two disadvantages of the use of magnetic resonance.

1. .....

.....

2. .....

.....[2]

8 A person is accidentally exposed for a short time to ionising radiation.

(a) Explain

(i) what is meant by *absorbed dose*,

.....

.....

.....[2]

(ii) why the effect of the exposure depends on the type of radiation.

.....

.....

.....[2]

(b) Suggest why the effects of the exposure cannot be fully assessed within a few weeks of the exposure.

.....

.....

.....[2]

© UCLES 2005

9 A person discovers that the power of the lens used to correct the defect of one of his eyes is +2.5 D.

(a) For this corrective lens,

(i) name the type of lens,

.....[1]

(ii) calculate the focal length in centimetres.

focal length = ... cm [1]

(b) **(i)** Name the defect of this eye.

.....[1]

(ii) Make calculations to estimate the distance of the far point and the distance of the near point from this unaided eye.

distance of far point = ...

distance of near point = ...
[4]

Option P

Environmental Physics

10 **(a)** Explain why the Earth's resources of fossil fuels are different from the total reserves.

.....

.....

.....

.....[3]

(b) The formation of fossil fuels is a continuous process. Suggest why the reserves of these fuels are considered to be finite.

.....

.....

.....[2]

© UCLES 2005

11 **(a)** Complete Fig. 11.1 to illustrate the action of a four-stroke petrol engine. [4]

stroke	induction	compression	power	.....
inlet valve	open	.....	.....	closed
outlet valve	.....	.....	.....	open

Fig. 11.1

(b) Modern four-stroke petrol engines frequently consist of four cylinders, each fitted with two inlet valves and two exhaust valves. Suggest, with one reason (in each case), why

(i) there are four cylinders,

.....

.....

.....[2]

(ii) there are more than two valves in each cylinder.

.....

.....

.....[2]

© UCLES 2005

[Turn over

12 (a) (i) Explain what is meant by *pollution*.

.....

.....

.....[2]

(ii) State one example of pollution that is

1. man-made,

.....

2. natural.

.....
[2]

(b) Suggest why large areas of forest are important to maintain the Earth's atmosphere and the environment.

.....

.....

.....

.....[3]

© UCLES 2005

For Examiner's Use

Option T

Telecommunications

13 An analogue signal is to be transmitted in digital form.

(a) Outline briefly the principles involved in the analogue-to-digital conversion of the signal and its transmission.

.....

.....

.....

.....

.....

.....

.....

.....[5]

(b) Suggest two advantages of the transmission of data in digital form.

1. .....

.....

2. .....

.....[2]

14 It is proposed to install an optic fibre link between London (England) and Sydney (Australia). The optic fibre, length 18000 km, has an attenuation of 1.7 dB km^{-1}. The noise power in the fibre is 6.0×10^{-19} W. The refractive index of the core of the fibre is 1.5.

(a) Explain what is meant by

(i) *attenuation*,

.....

.....[1]

(ii) *noise*.

.....

.....[1]

(b) The signal-to-noise ratio must not fall below 25 dB.

(i) Show that the smallest effective signal power that can be detected in the fibre is 1.9×10^{-16} W.

[2]

(ii) Calculate the maximum uninterrupted length of fibre through which a signal can be transmitted for an input signal of power 7.0 mW.

length = ... km [3]

© UCLES 2005

(c) With reference to your answer in **(b)(ii)**, suggest what can be done to enable the signal to be received in Sydney.

.....

.....[1]

(d) An alternative means by which the signal could be sent is by using a geostationary satellite. The orbit of such a satellite is 3.6×10^4 km above the Earth's surface.

(i) Explain what is meant by a *geostationary orbit*.

.....

.....

.....[2]

(ii) By considering the times of transmission by optic fibre and by satellite, explain briefly one advantage of the fibre when compared with the satellite.

.....

.....[3]

© UCLES 2005

BLANK PAGE

BLANK PAGE

BLANK PAGE

Permission to reproduce items where third-party owned material protected by copyright is included has been sought and cleared where possible. Every reasonable effort has been made by the publisher (UCLES) to trace copyright holders, but if any items requiring clearance have unwittingly been included, the publisher will be pleased to make amends at the earliest possible opportunity.

University of Cambridge International Examinations is part of the University of Cambridge Local Examinations Syndicate (UCLES), which is itself a department of the University of Cambridge.